Pool Vacuum Cleaner

xtrovac 110

USER MANUAL

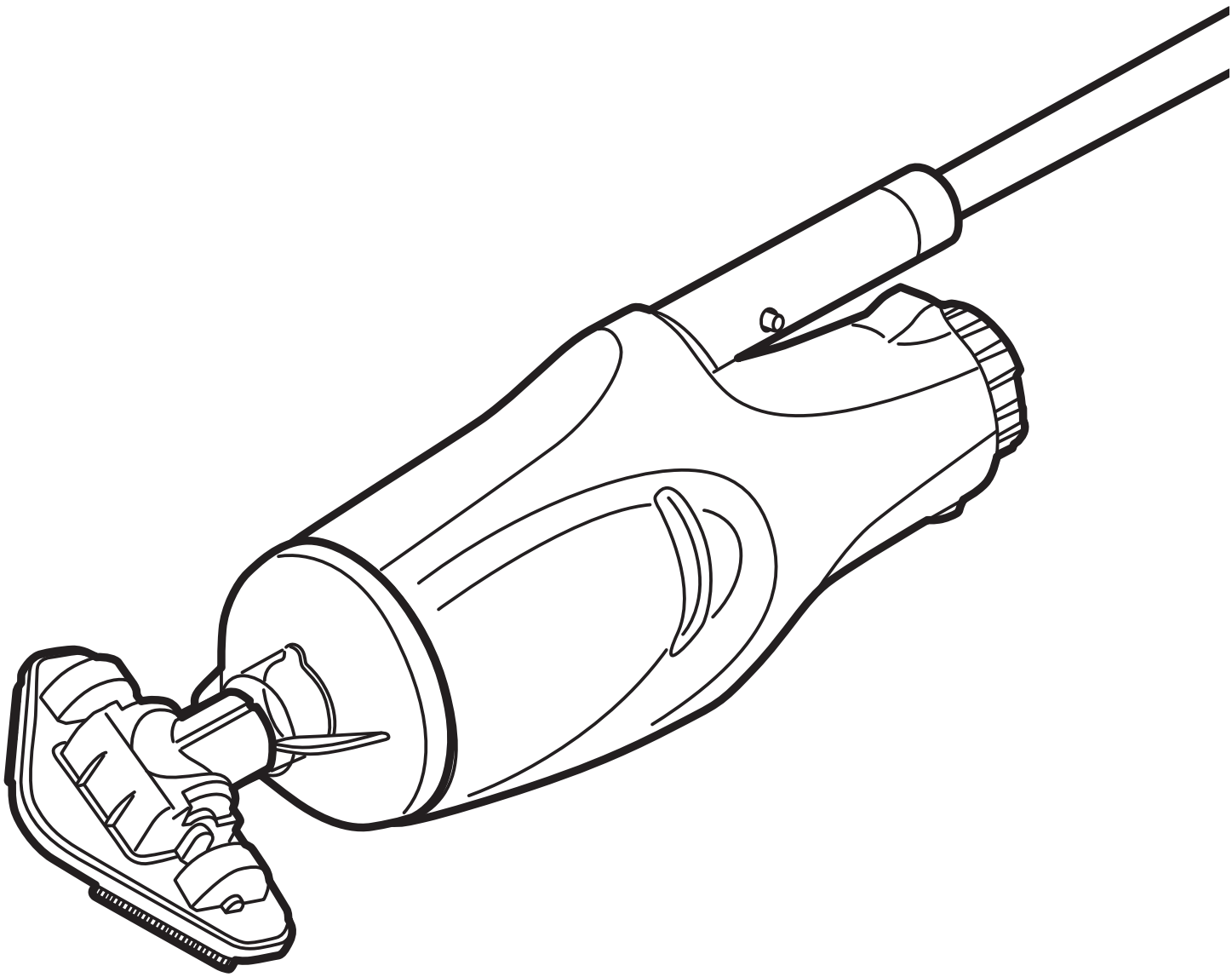

KOKIDO

PARTS DIAGRAM

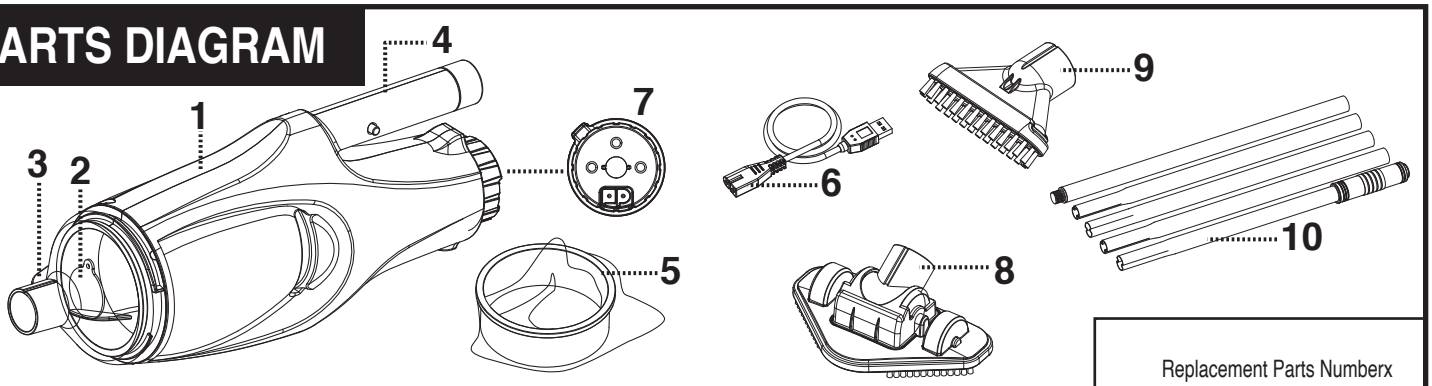

		Replacement Parts Numberx
1.	Main body	EV05ASM01/AMZ/25/US
2.	Valve	- - - - -
3.	Canopy	EV05-01/AMZ
4.	Pole connector	- - - - -
5.	Filter bag	EV05-02/AMZ
6.	USB charging cable	EV005-10-01
7.	Switching knob (2 modes of operation: Off & Charging / Active & Standby)	- - - - -
8.	Pivoting suction head	EV05-08/AMZ
9.	Flat nozzle & brush	EV05-07/AMZ
10.	Pole sections- 5 sections	EV05-09/AMZ

Battery: Rechargeable Li-ion battery pack, 2600mAh, 3.7V, 7.4Wh Charging voltage: 5.0V DC, 1.0 A

EV005BRXUSAAAMZ

Assembly:

Pivoting suction head & flat nozzle

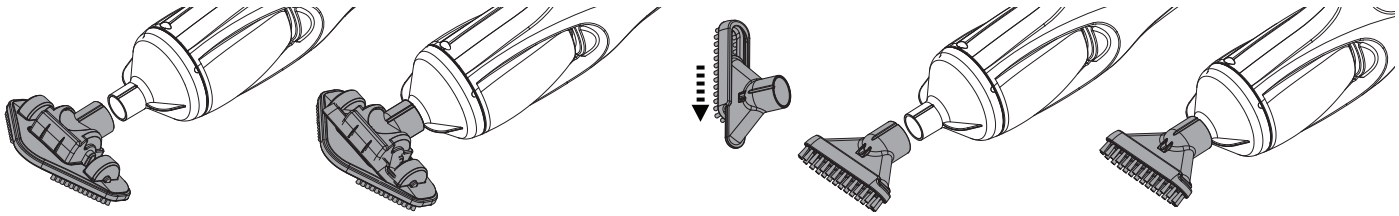

Note: For vinyl liner and fiberglass pools / spas, it is recommended to keep the brush on the flat nozzle to avoid damaging the pool / spa.

Pole

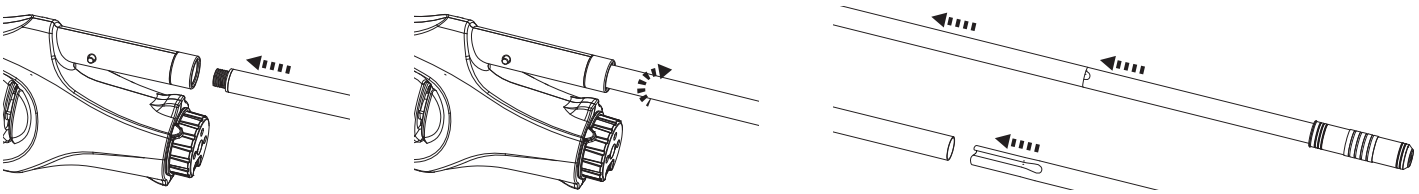

Telescopic pole (not included)

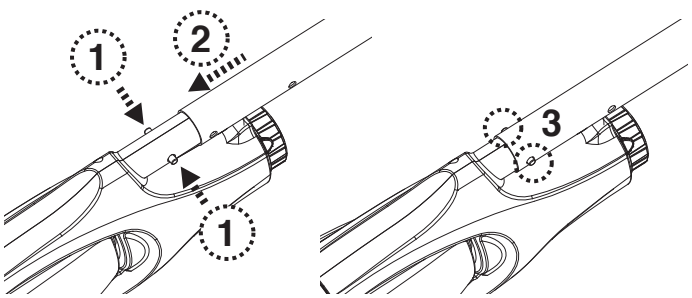

To release the telescopic pole, press down on both the side tabs simultaneously, and then pull out the pole.

SAFETY WARNINGS & INSTRUCTIONS

Information contained in this Instruction Manual will help you operate the item safely, protect yourself and others from hazards, and prevent damage to the device and other property.

****The USB charger indicated in this instruction manual is not provided with the product****

SAVE THESE INSTRUCTIONS

WARNING!

- To recharge the battery, only use a fully safety-approved and certified USB charger (not included) with an output of 5.0VDC and 1.0A. Use only a limited power source (LPS) or Class 2 type USB charger certificated by North American standards for the US and Canada markets.
- This is not a TOY. Children should be kept out of reach from this electric vacuum and its accessories.
- Never allow children to operate this product. Children shall not play with the product.
- Cleaning and user maintenance must not be carried out by children.
- You should not operate this electric vacuum when people/pets are present in the water.
- This electric vacuum is not intended for use by someone with reduced physical, sensory or mental capabilities, or a lack of experience and knowledge unless they have been given supervision or instruction concerning use of the appliance in a safe way and understand the hazards involved.
- Make sure the electric vacuum is fully immersed in water before initiating operation. The minimum water level required to operate the device must be above the switching knob of the electric vacuum when it is held vertically. The product is only intended to be used underwater in a pool or spa; any other use will void the warranty.
- Maximum operating depth in water is 2 meters (6.5 ft).
- Maximum water temperature: 5˚C (41˚F) – 42˚C (107.6˚F)
- Do not use this electric vacuum if any damage is detected.
- Replace damaged parts as soon as possible. Only use parts certified by the distributor or manufacturer.
- Make sure to connect USB charger to the power source through a residual current device (RCD)/ a ground fault circuit interrupter (GFCI). If in doubt, consult a qualified, professional electrician.
- Disconnect the electric vacuum from the supply mains before carrying out any maintenance, such as cleaning the filter.
- The battery installed is a rechargeable Li-ion battery pack. Do not attempt to replace it yourself.
- This electric vacuum should only be charged with the included USB cable.
- DO NOT handle the electric vacuum while it is charging with wet limbs and without shoes.
- You should not operate this electric vacuum while the pool is being used.
- DO NOT use this electric vacuum without an intact filter bag / filter cage in place, as the warranty will be voided as a result.
- Suction entrapment hazard: This electric vacuum generates suction. Do not allow hair, body, or any loose parts of your clothing to be in the suction range of the electric vacuum during its operation.
- Never insert body parts, clothing, or other objects into the openings and moving parts of the electric vacuum.
- DO NOT use this electric vacuum to pick up any toxic substances, flammable, or combustible liquids such as gasoline, nor in the presence of explosive or flammable fumes.
- Under no circumstances should you attempt to disassemble the electric vacuum and replace the impeller, motor, and battery by yourself.
- Never insert any object to make contact with the impeller.
- This electric vacuum shall not be used by children.
- The battery must be removed from the electric vacuum before it is scrapped.
- This electric vacuum contains battery that are only removed by skilled persons.
- The electric vacuum must be disconnected from the supply mains when the battery is being removed.
- For the battery disposal detail, refer to the section "Battery Disposal" in this manual
- The battery is to be disposed safely in accordance with local ordinances or regulations.
- Electric vacuum's battery is a maintenance-free, rechargeable lithium-ion battery pack, which must be disposed properly. Recycling is required; please contact your local authorities for more information.

CAUTION!

- DO NOT attempt to use the electric vacuum to clean anything other than your pool / spa.
- Use only original accessories delivered with this product.
- DO NOT use this electric vacuum right after pool-shocking. It is recommended to first let the pool circulate for at least 24-48 hours.
- Do not use this electric vacuum with another electric vacuum/cleaner simultaneously.
- Avoid picking up hard, sharp objects with this product. They may damage the electric vacuum and filter.
- Exercise caution when cleaning pool stairs.
- To avoid damaging the USB charging cable, do not carry the electric vacuum by the cable or tug the USB cable to disconnect it from the power source and product.
- Charging must be done indoors, in a well-ventilated area away from sunlight, children, heat, ignition sources, and within an ambient temperature range of 5˚C (41˚F) and 35˚C (95˚F).
- DO NOT leave the electric vacuum plugged in to the charger for over 10 hours.
- If the electric vacuum will not be used for an extended period, make sure it's switched off and use a damp cloth to clean and dry it and its accessories. Make sure to charge the electric vacuum to about 30% to 50% of the battery capacity before it is stored. Store in a well-ventilated area away from sunlight, heat, ignition sources, pool chemicals, and children. Recharge the electric vacuum every three months.

Above warnings and cautions are not intended to incorporate all possible instances for risks and / or severe injuries.

Pool / spa owners should always exercise extra caution and common sense when utilizing the product.

GETTING STARTED

Charging the battery

IMPORTANT NOTE: Fully charge the electric vacuum for 6 hours before using it for the first time.

WARNING!

- Do not use the USB charging cable / USB charger if any damage is detected.
- Make sure both the electric vacuum and the charging port are clean and dry before charging them. TIPS : use a cotton bud to dry the charging port and charging pins)
- The charging pins are waterproof. However, remnants of water in the port and around the pins could result in natural occurrence of stains (a byproduct of chemical reaction between water and electric currents). Otherwise, the stains can be removed by light scrubbing with a cotton bud soaked with juice of lemon or vinegar.

1. Place the unit on a flat surface. Set the vacuum to **Power Off**/ Charging position by turning the switching knob anticlockwise until it stops and completely exposes the charging port. Align and insert the USB charging cable into the charging port.

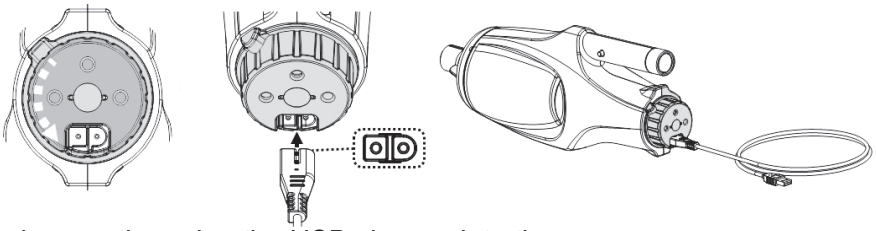

2. Connect the USB charging cable to the USB charger, then plug the USB charger into the power source. Once the electric vacuum begins to charge, the indicator light will turn red. Normally, it takes about **4.5 - 6** hours to reach a full charge. The indicator light will turn green once the electric vacuum is almost fully charged.

NOTE

- Always disconnect the USB charger from the power source as soon as charging is complete.
- Immediately turn the power off and disconnect the USB charger from the power source if you detect any of the following conditions:
  - Offensive or unusual odor
  - Excessive heat
  - Deformation, cracks, leaks
  - Smoke

3. When charging is complete, disconnect the USB charger from the power source and unplug the USB cable from the USB charger and electric vacuum.

Normally, the electric vacuum can operate up to **40** minutes on a full charge (after **4.5-6** hours of charging)
Note: Clean the filter regularly. Excessive debris inside the filter will increase burden to the motor operation and shorten the operating duration as a result.

NOTE: Rechargeable lithium-ion battery is classified as a consumable item. It has a limited life and will gradually lose its capacity to hold a charge. Therefore, the running time of the electric vacuum will gradually reduce after repeated charging and discharging throughout its product life.

Once the lifespan of the battery reaches its end, refer to section "**BATTERY DISPOSAL**" for instructions regarding battery disposal.

NOTE: Let the electric vacuum rest for 30 to 40 minutes before charging it again.

Pool Preparation

- If the liner is brittle, damaged, or wrinkled, contact a qualified professional to perform the necessary repairs or perform a liner replacement prior to using the pool vacuum.
- If you are using a saltwater pool, make sure all salt are dissolved before placing the pool vacuum into the water.

OPERATION

Before immersing the electric vacuum in water, turn the switching knob clockwise until it comes to a halt (you will hear a 'click") to expose the two water-sensing pins and a green dot on the right side. As soon as both pins make contact with water, the motor will start running. Similarly, it will stop as soon as the pins are no longer in contact with water.

NOTE: Never attempt to make contact with both pins with anything other than clean water.

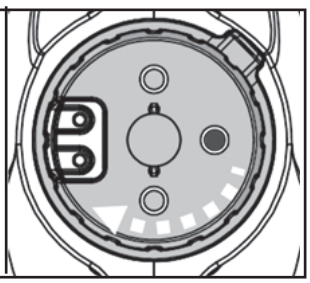

CAUTION

- DO NOT cover the side slot (middle gap) of the electric vacuum during operation, the impeller / motor may be damaged otherwise.
- Remove the electric vacuum from the pool/spa as soon as cleaning is complete.

CAUTION! Make sure the electric vacuum is always pointing downwards when it is placed into the pool. Otherwise, the pole connector may be bent and damaged as a result.

To retrieve the electric vacuum from the pool / spa, lift the electric vacuum while pointing it downwards in order to allow water to discharge.

Rinse the electric vacuum with fresh water after every use. DO NOT use any detergent.

EMPTYING THE FILTER

WARNING! Using the electric vacuum without a filter bag / filter cage in place will VOID your warranty.

In order to maximize the cleaning efficiency of the cleaner, be sure to clean the filter bag/ filter cage before and after each use.

CAUTION! If the electric vacuum is charging, disconnect the USB charger from the power source and detach the electric vacuum from the USB charging cable before making any attempts to clean it.

Emptying filter bag / filter cage

1. Place the electric vacuum on a stable surface.
2. Hold the electric vacuum body and turn the canopy anticlockwise until the white marking on the canopy reaches the lock-unlock marking. (**Fig.1**) Detach the canopy and remove the filter bag / filter cage from the electric vacuum

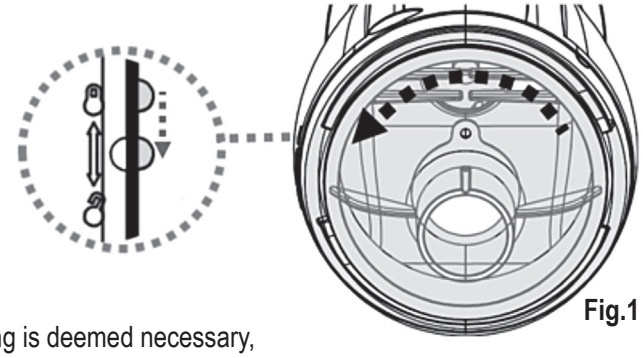

Fig.1

CAUTION! Replace a damaged filter bag / filter cage with a new one before initiating the next operation.

3. Clean out the debris and rinse the filter bag / filter cage with water. If brushing is deemed necessary, use only a soft brush to clean it gently and carefully.
4. Replace the filter bag / filter cage inside the electric vacuum. Reverse the steps to align and attach the canopy to electric vacuum and turn the canopy anticlockwise until it comes to a halt.

CAUTION! Replace a damaged filter bag / filter cage with a new one before initiating the next operation.

MAINTENANCE & STORAGE

NOTE:

1.Be sure to clean and dry the areas around the charging port and charging pins after every use to avoid the forming of stains (byproduct of a natural chemical reaction between electric current and water). Otherwise, the stains can be removed by light scrubbing with a cotton bud soaked with juice of lemon or vinegar.

2.Battery discharges on its own during storage. The battery should be stored at room temperature, charged to about 30% to 50% of its capacity.

3.You must recharge the battery at least once every three months if it is not frequently used.

- Disconnect all USB charging peripherals.
- Detach all accessories from the electric vacuum. If necessary, rinse the electric vacuum and accessories with fresh water. DO NOT use detergent.
- Be sure to drain the water from the electric vacuum before storing it.
- Use a damp cloth to clean and dry the electric vacuum and its accessories.
- Store them in a well-ventilated area away from the sunlight, children, heat, ignition sources, and pool chemicals. Ambient temperature for storage should be 10˚C – 25˚C (50˚F – 77˚F). NOTE: A higher temperature may reduce the battery life during storage.

WARNING!

- Under no circumstances should you attempt to disassemble the electric vacuum and replace the impeller, motor and battery by yourself.

CAUTION!

- Excessive heat can damage the battery and reduce the lifespan of your electric vacuum as a result.
- Consult your dealer regarding battery replacement if the following happens:
  - Battery appears damaged or will not charge fully.
  - Battery operation time is noticeably reduced. Observe and record the run times of the first few operations (on a full charge). Use these run times as a reference point to compare with run times of older batteries.
- The battery must be removed from the electric vacuum before it is scrapped.
- The electric vacuum must be disconnected from the supply mains when the battery is being removed.
- The battery is to be disposed safely in accordance with local ordinances or regulations.

NOTE: Incorrect maintenance may reduce the battery life and affect its capacity as a result.

BATTERY DISPOSAL (To be carried out by authorized technician)

Your electric vacuum's battery is a maintenance-free, rechargeable lithium-ion battery pack, which must be disposed properly. Recycling is required; please contact your local authorities for more information.

WARNING!

Never attempt to disassemble a battery pack

- Be sure to remove all personal items such as rings, bracelets, necklaces, and watches before you unwire the battery pack from the electric vacuum.
- A battery can produce a short circuit current high enough to weld a ring (or similar items) to metal, potentially causing a severe burn in the process.
- Wear complete eye protection, gloves, and protective clothing before you remove the battery pack.
- Avoid touching the wires altogether and avoid allowing them to make contact with any metal items, which could cause sparking and/or short-circuit the battery.
- Never smoke or allow a spark or flame in the vicinity of the battery or the electric vacuum.
- Do not expose the battery to fire or intense heat as this may result in an explosion.

CAUTION!

If a battery leak occurs, avoid contact with the leaking fluids and place the damaged battery in a plastic bag.

- If leaking fluids come in contact with skin and clothing, wash immediately with plenty of soap and running water.
- If leaking fluids come in contact with eyes, immediately flush them with cool, running water for at least 15 minutes and do not rub them. Seek medical attention immediately.

How to remove the battery pack for battery disposal only (To be carried out by an authorized technician)
Recommended tools (not included): Philips screwdriver and small slot screwdriver

1. Turn to release the canopy and take out the filter bag / filter cage. Use a small slot screwdriver to detach the ring from the handle. If it is too difficult to detach the ring with a screwdriver, use a cutting plier to cut. Turn the switching knob to open the charging port. Use the small slot screwdriver to pry and detach the middle cover from the switching knob. Use the Philips screwdriver to unfasten the knob-locking screw.



2. Detach the switching knob and use the Philips screwdriver to unscrew all the screws on the main body. Separate the body in two halves to access the main chamber.

3. Use the Philips screwdriver to unfasten the screws. Remove the top half of the chamber to expose the battery enclosure.

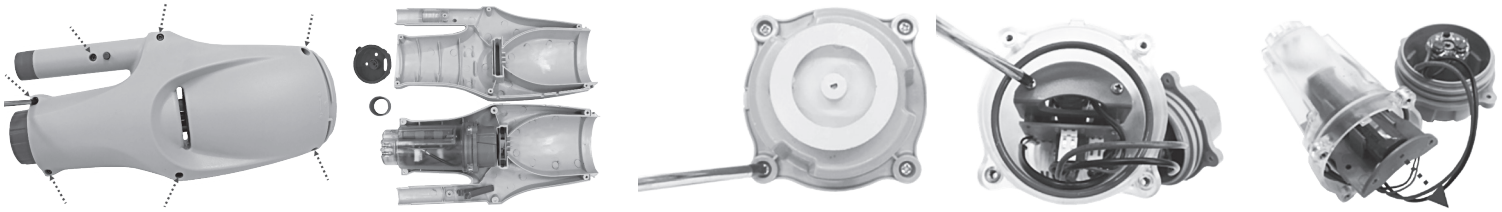

4. Remove the complete battery enclosure (with battery installed) from the chamber. In order to detach the battery cable, press on the clip on the connector and pull the cable out. Wrap the connector immediately with insulating tape in order to avoid short circuit caused by the contact of both wire terminals.

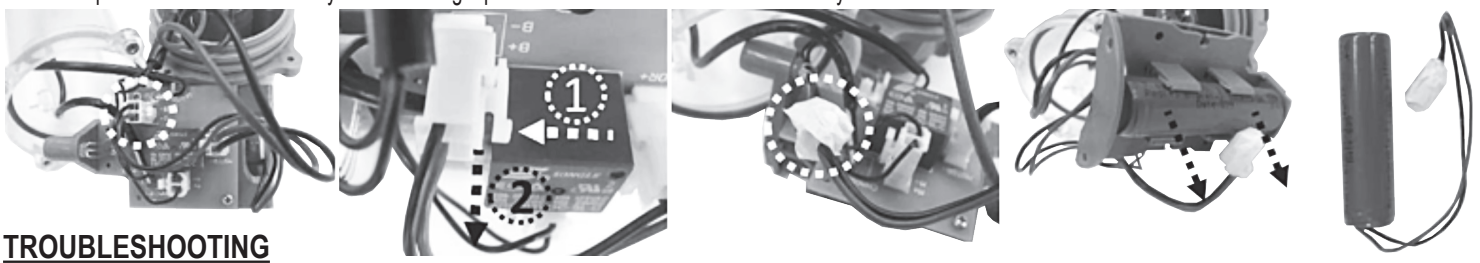

TROUBLESHOOTING

Problem	Possible Cause	Solution
Electric vacuum does not capture the debris	Battery is drained	Charge the battery again.
	Impeller is jammed	Power off the electric vacuum and inspect the middle gap of the electric vacuum to see if the impeller is jammed by larger debris. If possible, use a small tool to remove it with intensive care & caution. If necessary, contact your dealer for further instructions. **WARNING!** Make sure the electric vacuum is powered off when the unit is being serviced.
	Impeller is broken	Contact an authorized dealer regarding replacements.
	filter bag / filter cage is full	Clean the filter bag / filter cage.
Debris escapes from the filter	One-way valve is damaged	One-way valve works like a door to prevent the debris from escaping from the filter. Contact dealer for replacement part and instructions.
	filter bag / filter cage is damaged	Replace with a new filter bag / filter cage. Contact an authorized dealer regarding replacements.
Electric vacuum cannot be charged / recharged	Battery is damaged	Contact an authorized dealer regarding replacements. **WARNING!** DO NOT open the electric vacuum and replace the battery by yourself. This could result in severe or fatal injuries, as well as voiding the warranty.
	USB cable is damaged	Replace with a new USB cable.
	USB charger is out of order	Replace with a new USB charger.
Charging time is longer than advertised	Stained charging pins	The stains can be removed by using a cotton bud soaked with juice of lemon or vinegar to clean the areas around the charging pins.
Pivoting suction head (if provided) does not move smoothly	Wheel is jammed	Clean out the debris from the wheel. Note: Do not attempt to take out the wheels.

Environmental Programmes, WEEE European Directive

Please respect the European Union regulations and help to protect the environment. Return non-working electrical equipment to a facility appointed by your municipality that properly recycles electrical and electronic equipment. Do not dispose them in unsorted waste bins. For items containing removable batteries, remove batteries before disposing of the product.

© 2026 Kokido Development Ltd. 26004001
All rights reserved. No part of this document may be reproduced or transmitted in any form or by any means, electronic, mechanical, photocopying, recording, or otherwise, without prior written permission of Kokido Development Ltd.

Support Email: **support@kokido.com**
Toll-Free Voicemail: **(866) 683-7672**

Download Instruction Manual & Videos:
QR Code:
https://shop.kokido.com/pages/support-xtrovac-110

We reserve the right to change all or part of the features of the articles or contents of this document, without prior notice.
International patents pending

Manufacturer: Kokido Development Limited. Unit 1319, Sunbeam Centre, 27 Shing Yip Street, Kwun Tong, Kowloon, HK
EV005BRXUSAAAMZ
Made in China

SAVE THESE INSTRUCTIONS